SV2-022B

Gold Star Audio

SERVICE MANUAL

for service technician

Gold Star Co., Ltd.

AM/FM STEREO TUNER

GST-1000
GST-1010

SPECIFICATIONS

This specifications may be changed for improvement of performance without notice.

GENERAL

Semiconductors	:	6IC, 1MOS FET, 11TR, 20 Diodes
Power Supply	:	See the back panel of unit
Power consumption	:	18 watts
Dimensions	:	420x140x335 (m/m)
Weight	:	8kg

OUT PUT SECTION

out put terminal (out put level/out put impendance)

FM (100% MOD.) ..... FIXED: 750mV/4.2KΩ
VARIABLE: 1.5V/3.6KΩ

AM (30% MOD.) ..... FIXED: 250mV/4.2KΩ
VARIABLE: 350mV/3.6KΩ

AM TUNER SECTION

Tuning range 535KHz–1605KHz
Usable sensitivity ..... Built in antenna 400μV/m
Selectivity 30dB
Signal to noise ratio 40dB
IF rejection 48dB
AGC figure of merit 40dB

FM TUNER SECTION

Tuning range 87MHz–109MHz
IHF sensitivity 1.8μV
Sensitivity at 50dB quieting MONO: 3.0μV
STEREO: 4.0μV
Signal to noise ratio ..... MONO: 75dB
STEREO: 70dB
Image rejection 70dB
IF rejection 100dB
Frequency response (20Hz–15.5KHz) ..... +0.5dB, -3dB
Separation 100Hz: 35dB
1KHz: 48dB
10KHz: 35dB
Capture ratio 1.5dB
Selectivity (40 dB±400KHz)... 60dB
Harmonic distortion
MONO ..... 100Hz : 0.25%
1KHz : 0.25%
10KHz: 0.25%
STEREO .... 100Hz : 0.3%
1KHz : 0.25%
10KHz: 1%

Printed in Korea June, 1981

CONTENTS

OPERATING CONTROLS 1
CABINET DISASSEMBLY 2
DIAL STRINGING 3
ALIGNMENT INSTRUCTIONS 3-6
ELECTRICAL PARTS LOCATIONS 7, 8
WIRING DIAGRAM 9, 10
SCHEMATIC DIAGRAM 11, 12
EXPLODED VIEW 13, 14
MECHANICAL PARTS LIST 15
ELECTRICAL PARTS LIST 16

OPERATING CONTROLS

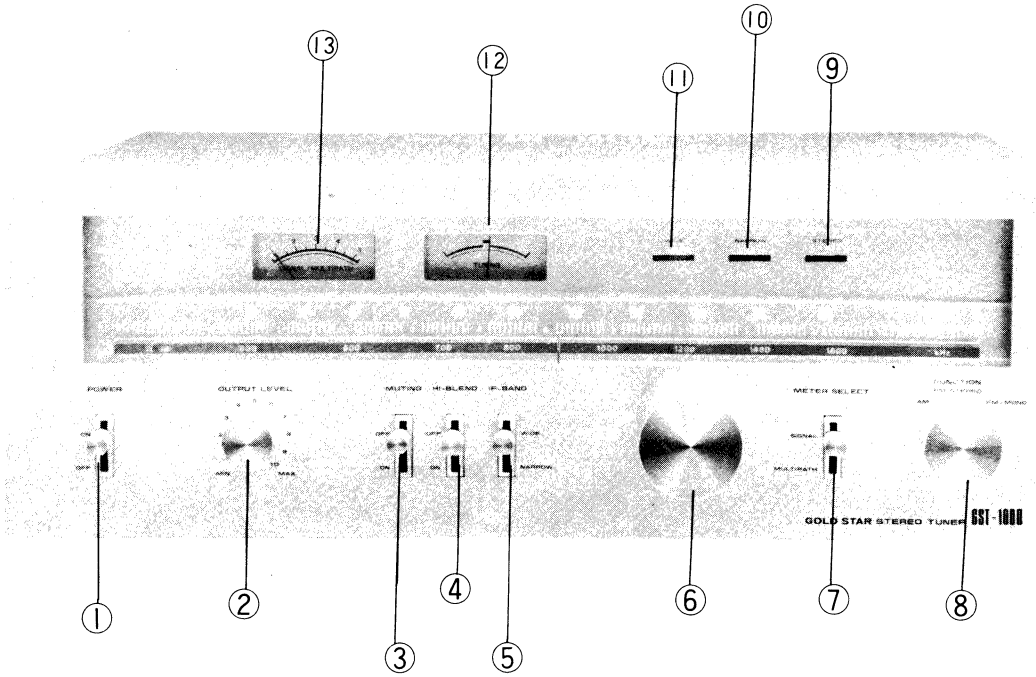

1) POWER SWITCH
2) OUTPUT LEVEL CONTROL KNOB
3) MUTING SWITCH
4) HI-BLEND SWITCH (Only MODEL GST-1000)
5) IF-BAND SELECTOR (Only MODEL GST-1000)
6) TUNING KNOB
7) METER SELECTOR
(In case of MODEL GST-1010, this SELECTOR is changed into 4) position where HI-BLEND SWITCH is located.)
8) FUNCTION SELECTOR
9) STEREO INDICATOR
10) NARROW INDICATOR
(In case of MODEL GST-1010: FM INDICATOR)
11) WIND INDICATOR (In case of MODEL GST-1010: AM INDICATOR)
12) TUNING METER
13) SIGNAL/MULTIPATH METER

CABINET DISASSEMBLY

1. Remove 4 screws⑤ holding the top case and lift the top case④ from the main chassis.
2. Remove 2 screws⑨ holding the front panel and take out all control knobs. And then remove special screw⑨.
3. Remove the front panel② from the front chassis.
4. Remove 5 screws⑥ holding the rear panel and remove the rear panel③ from the main chassis.

* See the exploded view (page 12, 13) for detailed disassembly.

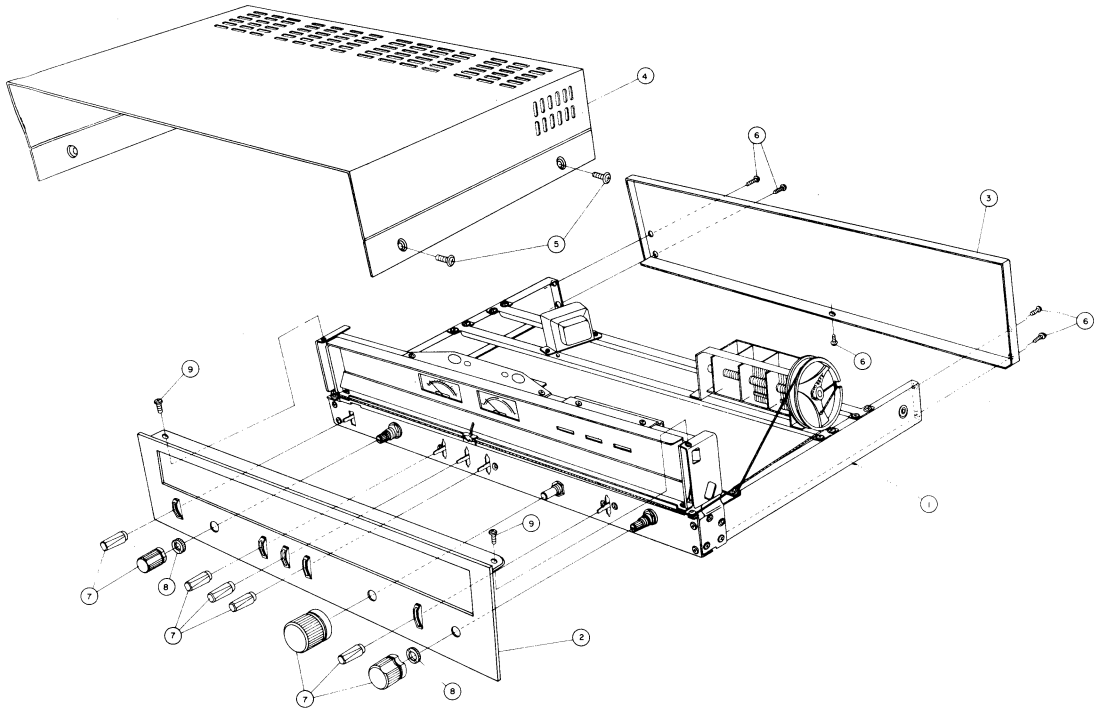

DIAL STRINGING

STRINGING METHOD

1. Hook the cord on the pulley as using spring.
2. Wind the cord two times clockwise on the tuning shaft.
3. Wind the cord one and a half times counter-clockwise.

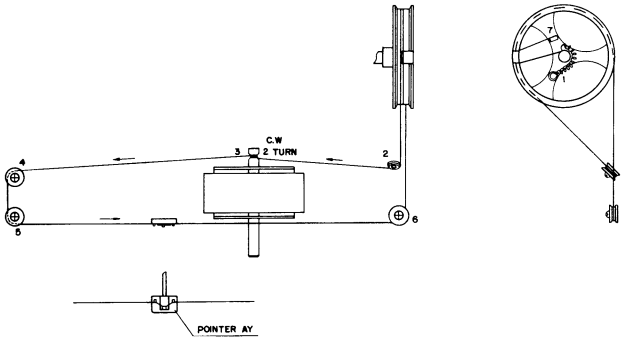

Set the varicon to minimum capacitance.
And string the cord by following the number sequence order as shown in figure.

ALIGNMENT INSTRUCTIONS

This stereo tuner has been aligned at the factory and normally will not require further adjustment. As a result, it is not recommended that any attempt is made to modificate any circuit. If any parts are replaced or if anyone tampers with the adjustments, realignment may be necessary.

Adjustment and test points location

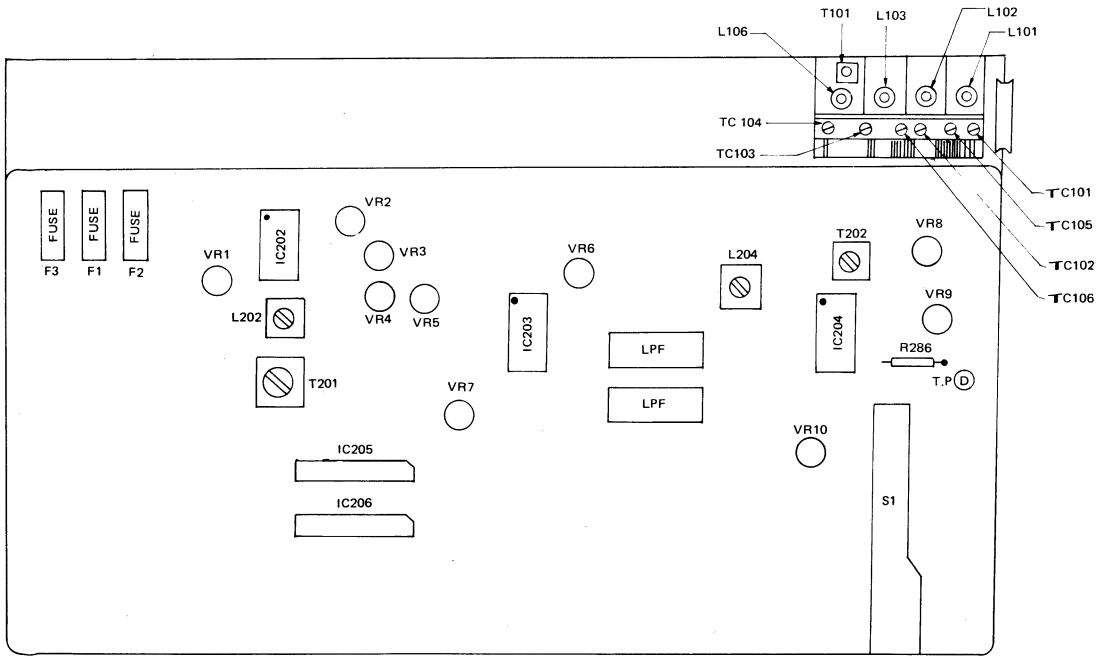

Instruments required

1. Signal generator (AM and FM)
2. IF sweep generator (AM and FM)
3. Test L00p antenna (for AM)
4. Dummy antenna (for FM)
5. VTVM
6. Oscilloscope
7. Stereo modulator
8. Frequency counter

AM ALIGNMENT

1. IF ALIGNMENT

Step	Adjustment	Remarks
IF Response	T202 IF Transformer	Adjust for scope pattern ith specified marker (455kHz) as shown in Fig.9

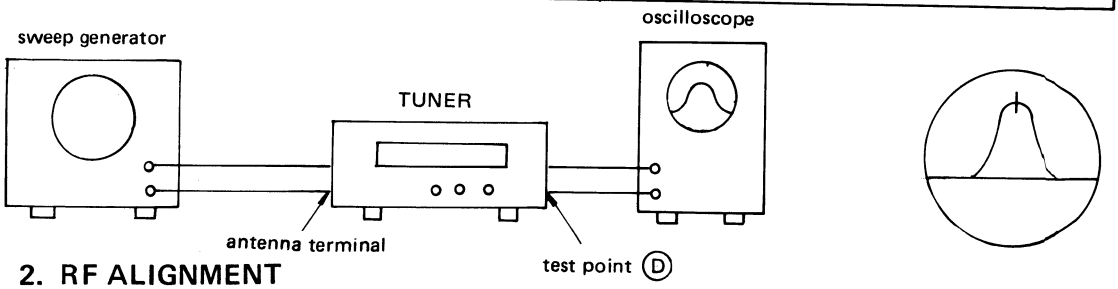

2. RF ALIGNMENT

Step	Adjusting Circuit	Connection		SG Frequency	Position of Tuning Dial	Adjustment	Remarks
		Input	Output				
1	OSC (Frequency Coverage)	Connect signal generator to test loop.	Connect VTVM to output terminal (FIXED)	515 kHz (400 Hz 30% MOD.)	gang closed	L204	Maximum
2				1650 kHz (400 Hz 30% MOD.)	gang opened	TC106	
Repeat steps 1 and 2.							
3	ANT (Tracking)	Connect signal gen :ator to test loop.	Connect VTVM to output terminal (FIXED)	600 kHz (400 Hz 30% (MOD.)	Tuen to 600 kHz signal	AM ANT coil (L2)	Maximum
4				1400 kHz (400 Hz 30% MOD.)	Tune to 1400 kHz Signal	TC105	Maximum
Repeat steps 3 and 4.							

3. GENERAL ALIGNMENT

1	AGC/AM output level	Connect signal generator to test loop.	Connect VTVM to output terminal (FIXED)	1000 kHz (400 Hz 30% MOD.)	Tune to 1000 kHz signal	VR8, VR9	*1
2	Signal meter sensitivity			"	"	VR 10	*2
Repeat steps 1 and 2							

*1 : Adjust to obtain 250mV on VTVM when applying 5mV(74dB) SSG input signal.
*2 : Adjust to indicate 4.5 on signal meter when applying 5 mV (74dB) SSG input signal.

Note: When adjusting the AM tuner section, inductiviely connect the minimum input signal to the set.

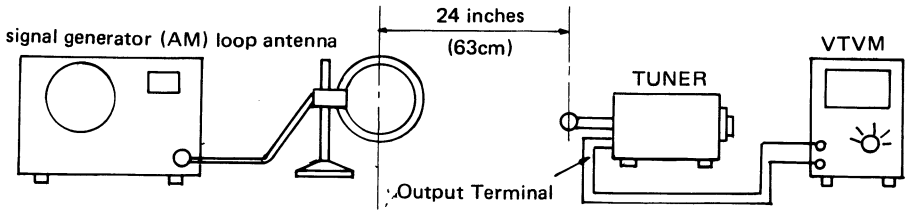

FM ALIGNMENT

1. IF & RF ALIGNMENT

Step	Adjusting Circuit	Connection		SG Frequency	Position of Tuning Dial	Adjustment	Remarks
		Input	Output				
1	IF	Connect sweep generator to FM ANT terminal (300 ohm)	Connect oscilloscope to TP (IC 202 pin 6)	10.7 MHz	Near Max. capacity of VC. at position with no unrequired signal.	T201 (Lower core only)	10.7MHz
2	Radio Det.		Connect oscilloscope to TP (IC202 pin6)			T201 (Upper core only) L302	75kHz
3	OSC (Frequency coverage)	Connect FM signal generator to FM ANT. terminal (300 ohm)	Connect VTVM to output terminal	87.5 MHz (400 Hz 30% MOD.)	Low end of dial scale	L106	Maximum
4				109 MHz (400 Hz 30% MOD.)	High end of dial scale	TC104 Trimmer	
Reapt steps 3 and 4 for minimum change.							
5	Tracking	Connect FM signal generator to FM ANT. terminal	Connect VTVM to output terminal.	90 MHz (400 Hz 30% MOD.)	Tune to 90 mhz signal.	L101, 102 L103, T101	Maximum
6				106 MHz (400 Hz 30% MOD.)	Tune to 106 MHz signal.	TC101 TC102 TC103	
Repeat steps 5 and 6 for minimum change.							

2. GENERAL ALIGNMENT

Step	Adjusting Circuit	Connection		SG Frequency	Position of Tuning Dial	Adjustment	Remarks
		Input	Output				
1	Tuning meter	–	–	–	no signal	VR1	*3
2	output level	Connect FM signal general to FM ANT. terminal (300 ohm)	Connect VTVM to output terminal (FIXED)	98 MHz (1 kHz 100% (MOD.)	Tune to 98 MHz signal	VR4, VR5	To obtain 1.7V on the output terminal (VARIABLE).
3	Muting sens.		–	"	"	VR2	To get muting sens. 15-20dB
4	Signal meter level		–	"	"	VR3	*4

*3: In noise with no signal, adjust VR1 so that tuning meter may be indicated halfway in the indication.
*4: Adjust VR3 so that signal meter may be indicated about 4.5.

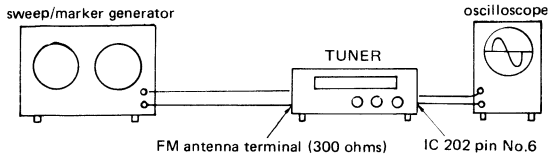

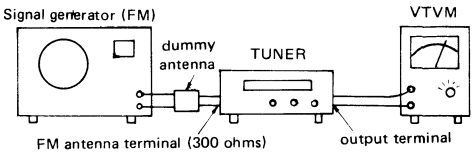

3. MPX ALIGNMENT

Step	Connection		SG Frequency	Position of Tuning Dial	Adjustment	Remarks
	Input	Output				
Stereo separation	Connect FM signal generator to FM ANT. terminal (300 ohms)	Connect VTVM to output terminal. (FIXED)	98MHz (1KHz L+R 90% pilot 10%	Tune to 98MHz signal	VR6, VR7	Left ch: Max Right ch: Min (R ch: Max L ch: Min)

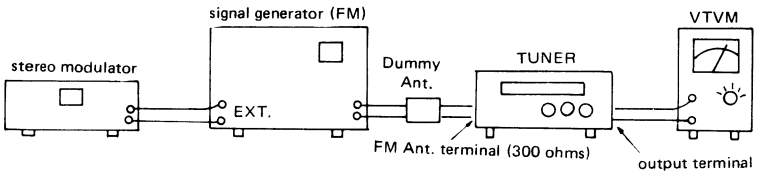

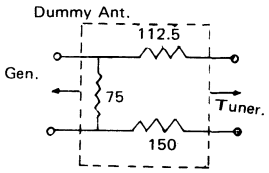

ELECTRICAL PARTS LOCATIONS

FRONT END

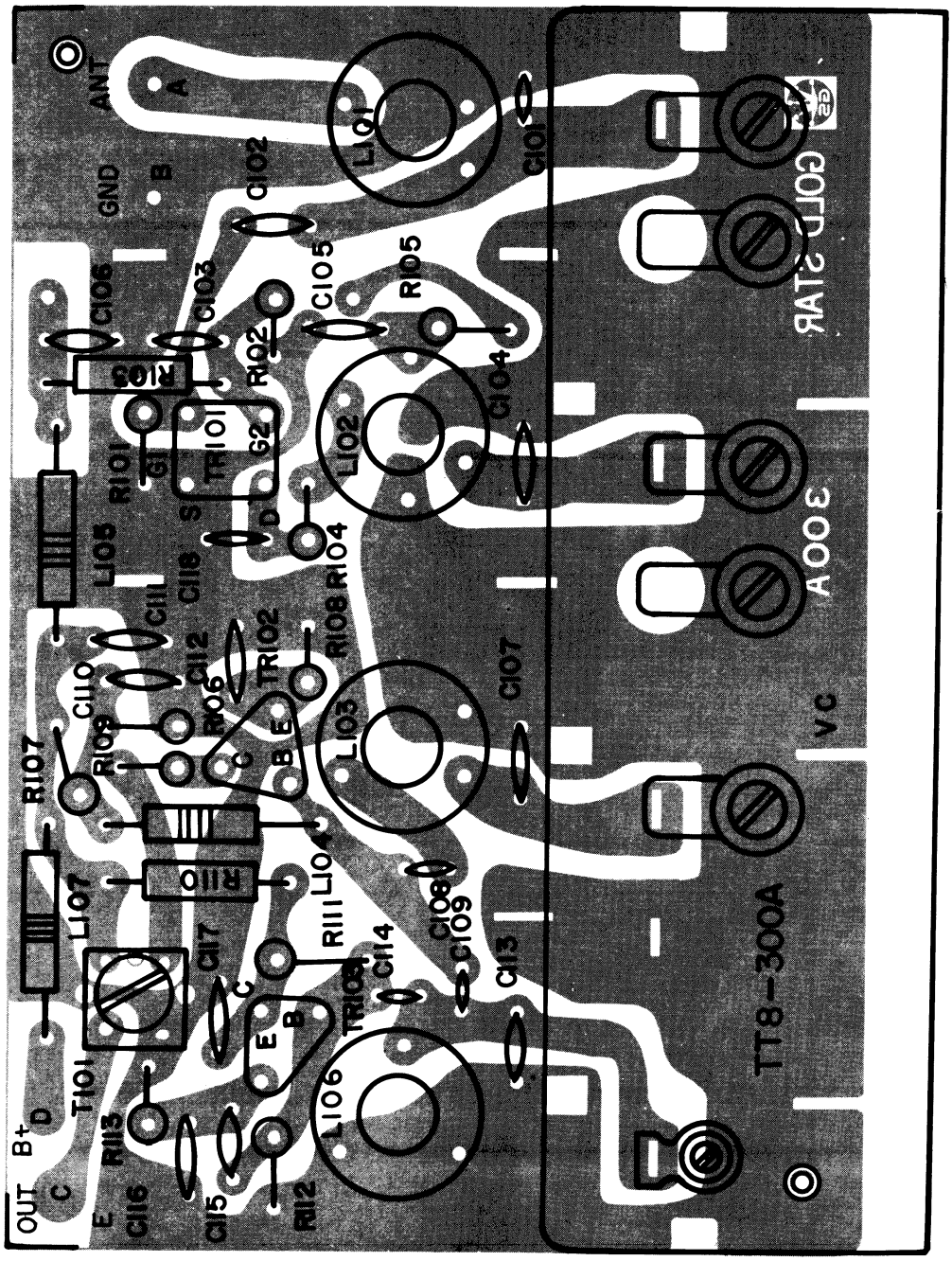

AM & FM IF, MPX

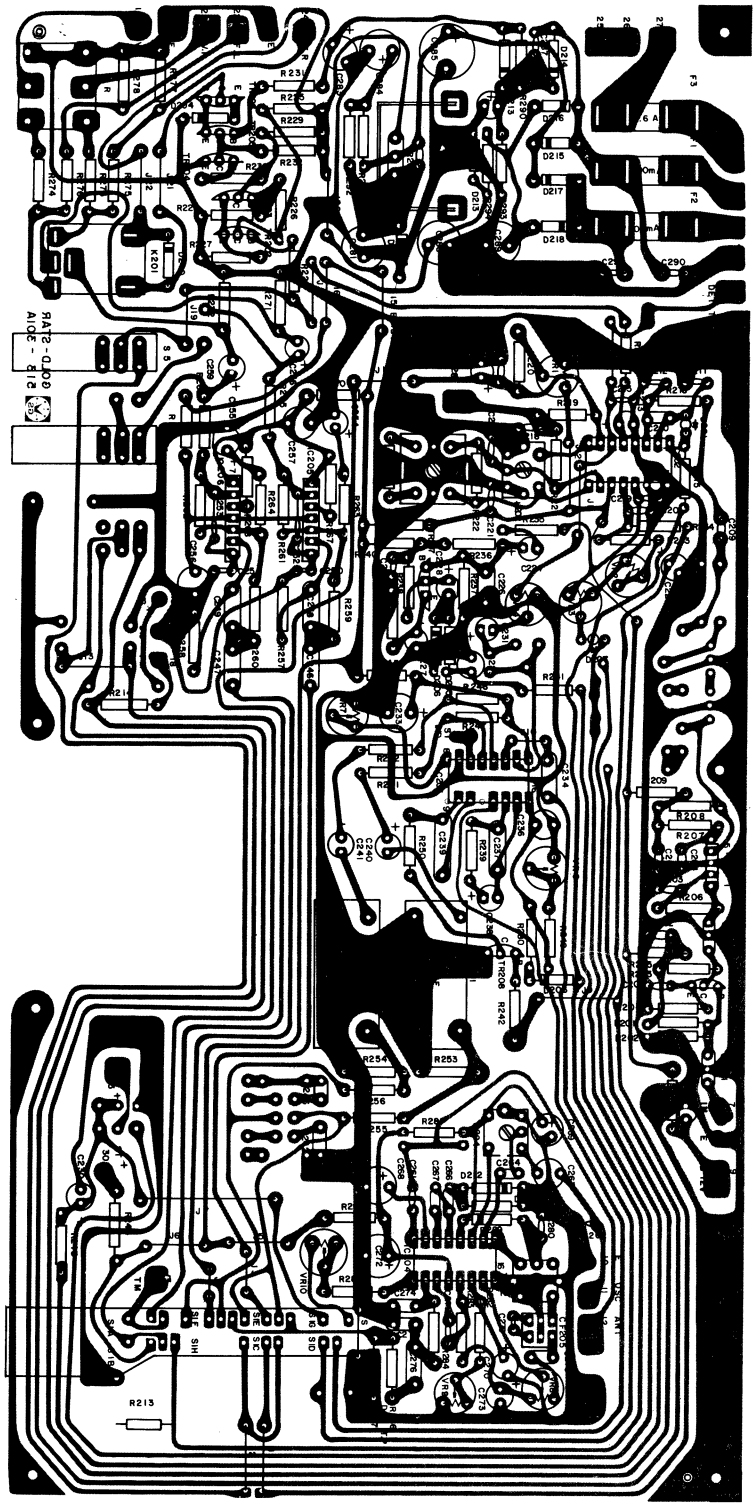
RA72-0409
A10E - 818
K201
R213
VR10
R209
R208
R207
R206
R242
R253
R254
R256
R259
R260
R261
R264
R267
R268
R269
R270
R271
R272
R273
R274
R275
R276
R277
R278
R279
R280
R281
R282
R283
R284
R285
R286
R287
R288
R289
R290
R291
R292
R293
R294
R295
R296
R297
R298
R299
R300
R301
R302
R303
R304
R305
R306

WIRING DIAGRAM

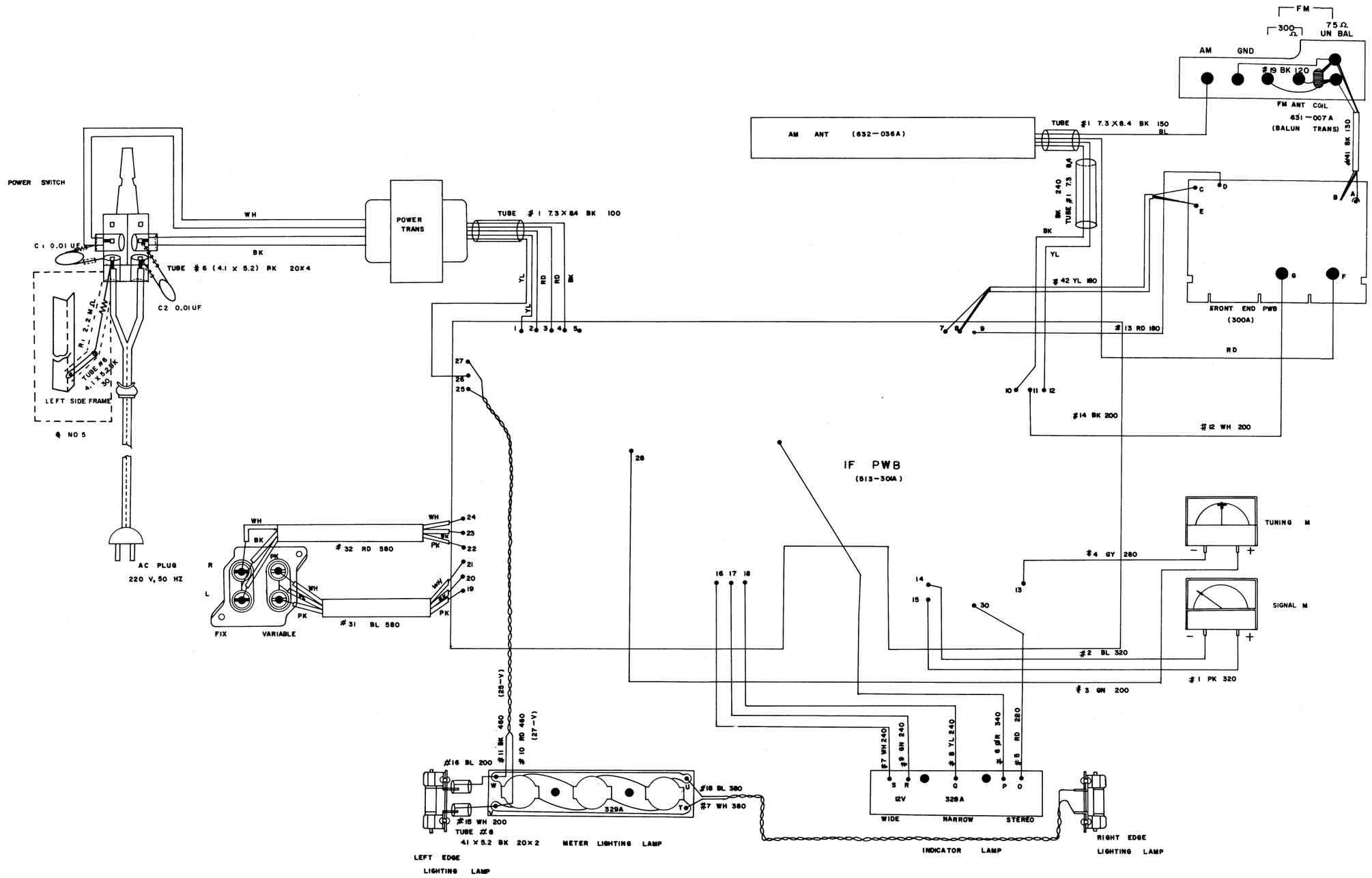

SCHEMATIC DIAGRAM

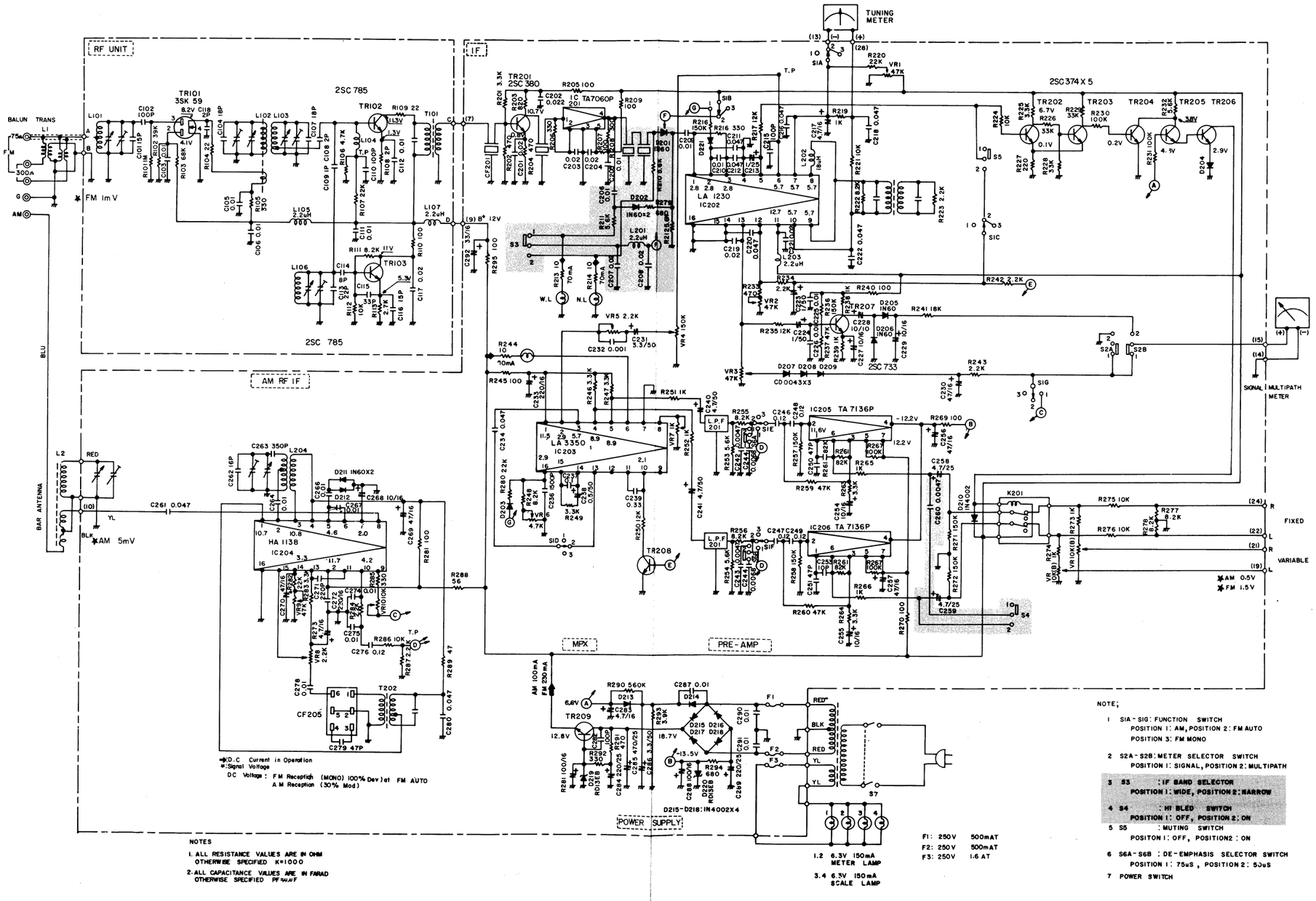

In case of MODEL GST-1010, portions identified by shaded area are deleted.

EXPLODED VIEW

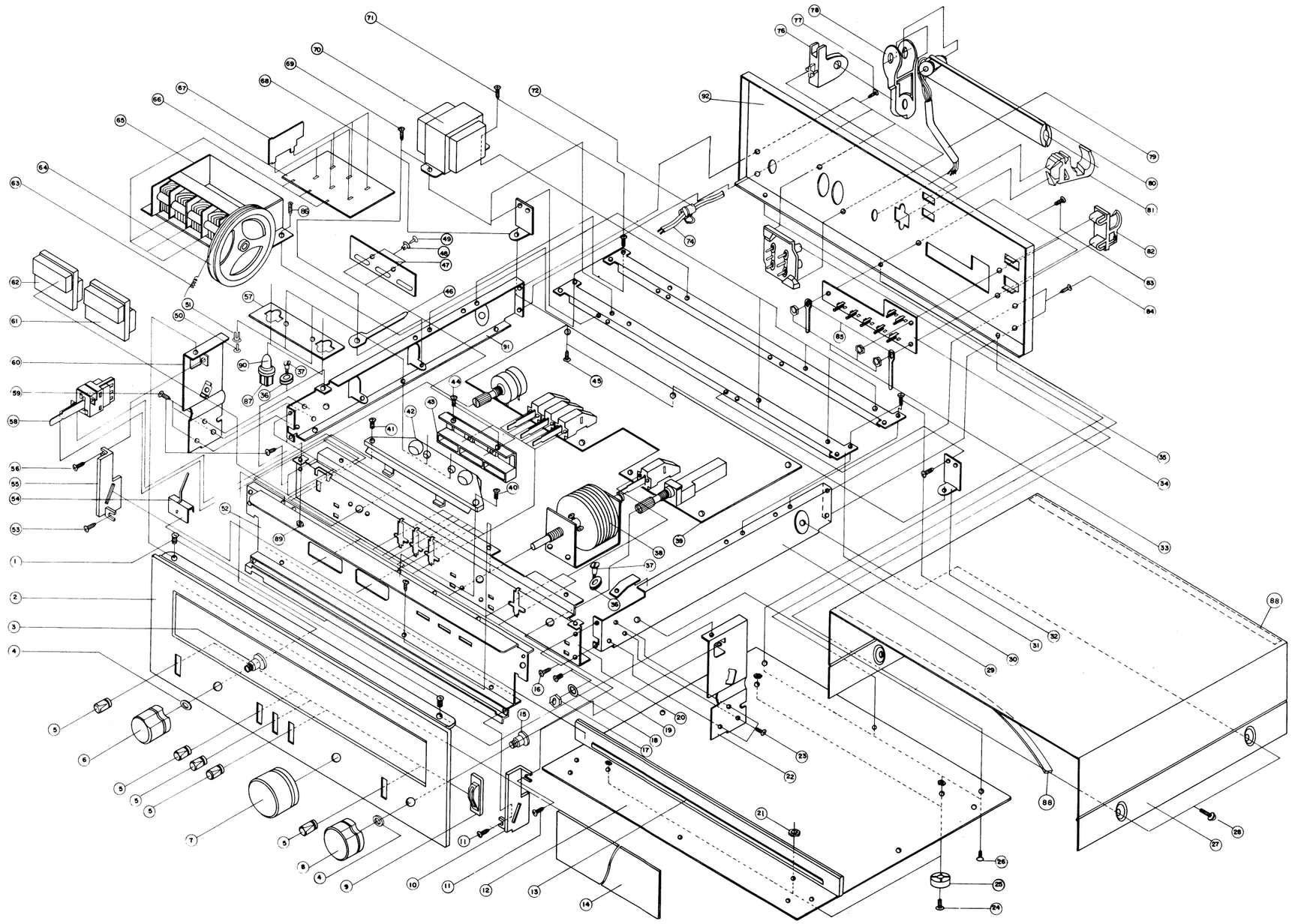

MECHANICAL PARTS LIST

NO.	PART NO.	DESCRIPTION
1	MCC1830J	SCREW, MCC+3X6 FZMY
2	258-070A	PANEL, FRONT (GST-1000)
	258-070L	PANEL, FRONT (GST-1010)
3	341-124A	BUSHING, LOCK
4	352-601A	NUT, SPECIAL
5	273-200A	KNOB, LEVER
6	273-201A	KNOB, LEVER
7	271-070A	KNOB, TUNING
8	273-202A	KNOB, FUNCTION
9	284-016A	GUIDE, LEVER S/W
10	324-269A	HOLDER(R), SCALE PLATE
11	TRQ1830I	SCREW, TRQ2+3X6A FBK
12	256-268A	PLATE, BOTTOM
13	256-269A	PLATE SCALE
14	236-101A	WINDOW
15	341-124B	BUSHING
16	TRQ1836J	SCREW, TRQ2+3X8A
19	MRC1831J	SCREW, MRC+3X6
20	313-110A	CHASSIS FTONT
21	NHA2200J	NUT
22	321-187B	BRACKET (R), MAIN
23	TRQ1836J	SCREW, TRQ2+3X8A
24	MRC2243J	SCREW, MRC+4X14
25	322-106A	SUPPORTER FOOT
26	TRQ1836J	SCREW, TRQ2+3X8A
27	213-160A	CABINET
28	353-052B	SCREW, SPECIAL
29	315-038A	FRAME(R), SIDE
30	315-047A	FRAME(A), ACROSS
32	321-608A	BRACKET P.W.B.
33	NHA1800J	NUT, NH1-3 FEMY
34	563-052A	TERMINAL AY, ANTENNA
35	573-047B	SOCKET AY, RCA
36	434-003F	ROLLER
	434-003E	ROLLER
37	353-610A	SHAFT, ROLLER
38	421-618E	SHAFT AY,TUNING
39	511-296A	P.W.B. AY, IF AMP
	513-301A	P.W.B. IF AMP
40	TCQ1836J	SCREW, TCQ+3X8 FEMY
41	TCQ1836J	SCREW, TCQ+3X8 FEMY
42	384-036A	GUIDE, REFLECTION
43	321-186A	BRACKET, LAMP
44	TRQ1836J	SCREW, TRQ2+3X8A
45	MRC1830J	SCREW, MRC+3X6
46	365-060C	METAL, CKT FIXING

NO.	PART NO.	DESCRIPTION
47	511-326A	P.W.B. Ay, LAMP INDICATOR
48	341-041A	BUSHING, PIN
49	356-008A	PIN, INSERT
50	356-008A	PIN, INSERT
51	341-041A	BUSHING, PIN
52	258-068A	PANEL, SCALE PLATE
53	TRQ1830I	SCREW, TRQ2 3X6A FBK
54	361-103A	POINTER
55	324-270A	HOLDER(L), SCALE PLATE
56	TRQ1830I	SCREW TRQ2+3X6A FBK
57	513-329A	P.W.B. STANLEY LAMP 1.6TX1000X1000
58	556-031A	SWITCH, LEVER, SDE-4L
59	TRQ1836J	SCREW, TRQ2+3X8A
60	321-187A	BRACKET(L), MAIN
61	518-017A	METER, TUNING
62	518-016A	METER, SIGNAL/MULTIPATH
63	442-004I	SPRING
64	431-038A	DIAL PULLEY
65	219-012A	HOUSING VARICON
66	513-300A	P.W.B. FRONT END
67	256-291A	PLATE, SHIELD(A)
68	321-608A	BRACKET P.W.B.
69	353-607B	SCREW, SPECIAL(MSWR FEMY 3X8+)
70	641-618C	TRANS, POWER
71	353-607B	SCREW, SPECIAL(MSWR FEMY 3X8+)
72	324-348A	BUSHING, CORD
74	681-039D	POWER CORD
75	MRC1836	SCREW, MRC+3X8 FBK
76	324-237A	HOLDER BASE
77	TRQ1836I	SCREW, TRQ2+3X8A FBK
78	324-238A	HOLDER ANTENNA HOUSING
79	881-0032	TUBE VINYL FR-1 #6 4.1X5.2 BK
80	219-010A	HOUSING ANTENNA
81	321-149A	BRACKET ANTENNA
82	324-271A	HOLDER, WIRE
83	MRC1836I	SCREW, MRC+3+8 FBK
84	TRQ1830I	SCREW, TRQ2+3X6A FBX
85	365-060C	METAL, CKT FIXING
	TRQ1836J	SCREW, TRQ2+3XBA
86	353-607B	SCREW, SPECIAL
87	573-030A	SOCKET AY
88	472-604B	FELT
89	NHA1800J	NUT, NH1-3 FEMY
90	582-014A	LAMP AY
91	315-039A	FRAME(L), SIDE
92	258-069C	PANEL, BACK (GST-1000)
	258-069I	PANEL BACK (GST-1010)

ELECTRICAL PARTS LIST

NO.	SYMBOL NO.	DESCRIPTION	PART NO.
1	TR101	FET 3SK-59GR	667-008B
2	TR102, 103	TRANSISTOR TOSHIBK K. 2SC785-O	664-014C
3	TR201	" 25C380-O	664-405B
4	TR202, 203, 204	" 35C374-BL	664-403A
5	TR205, 206	" "	"
6	TR207	" 2SC733-GR	664-410C
7	TR208	" 2SC374-BL	664-403A
8	TR209	" 2SD234-O	664-601B
9	T101	COIL FM IFT	644-610A
10	T201	COIL FM DOUBLE-TUNING	637-602B
11	T202	COIL MW IFT (DOUBLE TUNNING)	644-609C
12	L101	COIL FM RF	635-607C
13	L102	COIL FM RF	635-607A
14	L103	COIL FM RF	635-607B
15	L106	COIL FM RF	635-607D
16	L104, 105, 107	COIL, CHOKE	636-602B
17	R101	R, CARBON FILM 1.0M-J ¼WR	RD105J02,
18	R102	" 39K-J ¼WR	RD393J02
19	R103	" 68K-J ¼WM	RD683J09
20	R104, 109	" 22-J ¼WR	RD220J02
21	R105	" 330-J ½WR	RD331J02
22	R106	" 4.7K-J ¼WR	RD472J02
23	R107	" 22K-J ¼WR	RD223J02
24	R108	" 1K-J ¼WR	RD102J02
25	R110	" 100-J ¼WR	RD101J09
26	R111	" 8.2K-J ¼WR	RD822J02
27	R112	" 10K-J ¼WR	RD103J02
28	R113	" 2, 7K-J ¼WR	RD272J02
29	R201, 246, 247, 249	" 3, 3K-J ¼WR	RD332J09
30	R263, 264, 283	" "	RD332J09
31	R202, 204, 233, 291	" 470-J ¼WM	RD471J09
32	R203	" 820-J ¼WM	RD821J09
33	R206, 208, 216	" 330-J ¼WM	RD331J09

NO.	SYMBOL NO.	DESCRIPTION	PART NO.
34	R292, 285	" "	RD331J09
35	R210, 211, 212, 232	" 5.6K-J ¼WM	RD562J09
36	R253, 254	" "	RD562J09
37	R215, 236, 257, 258	" 150K-J ¼WM	RD154J09
38	R271, 272	" 150K-J ¼WM	RD154J09
39	R217, 235, 250	" 12K-J ¼WM	RD123J09
40	R219, 238, 239, 265	" 1K-J ¼WM	RD102J09
41	R219	" 390K-J ¼WM	RD391J09
42	R266, 273, 274	" 1K-J ¼WM	RD102J09
43	R220, 242, 280, 282	" 22K-J ¼WM	RD223J09
44	R221, 224, 275	" 10K-J ¼MW	RD103J09
45	R276, 286	" "	RD103J09
46	R222, 248, 277	" 8.2K-J ¼WM	RD822J09
46	R222, 248, 277	" "	RD822J09
48	R223, 234, 243	" 220K-J ¼WM	RD221J09
49	R284, 287	" "	RD221J09
50	R225, 226, 228, 229	" 33K-J ¼WM	RD333J09
51	R227	" 220-J ¼WM	RD221J09
52	R230, 231, 267, 268	" 100K-J ¼WM	RD104J09
53	R337, 259, 260	" 47K-J ¼WM	RD473J09
54	R241	" 18K-J ¼WM	RD183J09
55	R213, 214, 244	" 82-J ¼WM	RD100J09
56	R251, 252	" 1K-J ¼WM	RD102J09
57	R261, 262	" 82K-J ¼WM	RD823J09
58	R288	R. CARBON FILM 56-J ¼WM	RD560J09
59	R289	" 47-J ¼WM	RD470J09
60	R293	" 3 9K-J ¼WM	RD392J09
61	R290	" 560K-J ¼WM	RD564J09
62	R279, 294	" 680-J ¼WM	RD681J09
63	C101, 116	C. CERAMIC CC150PF-J SL 50V	CC150J06
64	C110	" CC100PF-J SL 50V	CC101J01
65	C103, 105, 106	" CKO 022MF-Z 50V	CK223Z02
66	C111, 112, 117	" "	CK223Z02

NO.	SYMBOL NO.	PART NO.	DESCRIPTION
67	C104, 107	CC180J06	" CC18PF-J CH 50V
68	C108	CC120C06	" CC12PF-CH 50V
69	C113	CC180K04	" CC18PF
70	C119	CC040D06	" CC4PF-D CH 50V
71	C109	CC010C06	C. CERAMIC CC1PF-C CK 50V
72	C114	CC120J12	" CC8PF-D CH 50V
73	C115	CC330J06	" CC33PF-J CH 50V
74	C252, 253	CC100D01	" CC10PF-D SL 50V
75	C262	CC160J01	" CC47PF-J SL 50V
76	C250, 251, 279	CC470J01	" CC100PF-J SL 50V
77	C215, 282	CC101J01	" CC220PF-J SL 50V
78	C271	CC221J01	" CC220PF-J SL 50V
79	C205, 296, 209, 225	CK103Z02	" CKO. 01MF-Z 50V
80	C287, 290, 291	CK103Z02	" CKO. 02MF-Z 50V
81	C201, 202, 203, 204	CK223Z02	" CKO. 022MF-Z 50V
82	C207, 208, 219, 221	CK223Z02	" "
83	C220, 222, 261, 265	CK473Z02	" CKO. 047MF-Z 50V
	280		
84	C213, 223, 224	CE105F01	C. ELECTROLYTIC 1MF 50V
85	C286	CE335F01	" 3.3MF 50V
86	C217, 273, 283	CE475C01	" 4.7MF 50V
87	C214, 227, 228, 229	CE106C01	" 10MF 16V
	54, 55, 68		
88	C292	CE336C01	" 33MF 16V
89	C230, 256, 257	CE476C01	" 47MF 16V
90	C269, 270	CE476C01	" "
91	C231	CE335F07	" L.N. 3.3MF 50V
92	C240, 241, 258, 259	CE475F07	" L.N. 4.7MF 50V
93	C281, 288	CE107C01	" 100MF 16V
94	C233, 272	CE227C01	" 220MF 16V
95	C284, 289	CE227D01	" 220MF 25V
96	C285	CE477D01	" 470MF 25V
97	C238	CE474F01	" 0.47MF 50V
98	C210, 264, 274, 275	CQ103M01	" 0.01MF-M 50V
99	C278, 266, 267	CQ103M01	" 0.01MF-M 50V
100	C226, 237	CQ104M01	" 0.1MF-M 50V

NO.	SYBMOL NO.	PART NO.	DESCRIPTION
101	C232	CQ102M01	" 0.001MF-M 50V
102	234	CQ473M01	" 0.047MF-M 50V
103	C246, 247, 248, 249	CQ124J01	" 0.12MF-J 50V
104	C276	CQ124J01	" "
105	C239	CQ334J01	" 0.33MF-J 50V
106	C244, 245	CQ682J01	" 0.0068MF-J 50V
107	C243, 242	CQ472J01	C. POLYESTER 0.0047MF-J 50V
108	C260	CQ223M01	" 0.022MF-M 50V
109	C263	CY351J01	" 350PF-JR
110	C236	CY152J01	" 1.500PF-JR
111	D201, 202, 203	651-001D	DIODE DETECT IS188FM-1
112	D211, 212	651-001D	DIODE DETECT 2 IS188FM-1
113	D204, 205, 206	651-020A	DIODE IS188FM-2
114	D213, 214	651-020A	DIODE IS188FM-2
115	D207, 221	654-012A	DIODE BIASING GSD0043
116	D210, 215, 216, 217	652-005B	DIODE RECTIFIER IN4002
	218		
117	D219, 220	654-411B	DIODE ZENER RD13EB
118	IC201	668-024A	INTEGRATED CIRCUIT TA7060P
119	IC202	668-020A	IC LA1 230 (IF)
120	IC203	668-025A	INTEGRATED CIRCUIT LA3350
121	IC204	668-026A	" HA1138
122	IC205, 206	668-027A	" TA7136P
123	VR201, 202, 203, 209	613-022G	VR, SEMI-FIXED SR19R-47KB 10D
124	VR204	613-022E	" SR19R-150KB 10D
125	VR205	613-022D	" SR19R-22KB 10D
126	VR206	613-022C	" SR19R-4.7KB 10D
127	VR207	613-022A	" SR19R-1KB 10D
128	VR208	613-022B	" SR19R-10KB 10D
129	VR210	613-022F	" SR19R-10KB 10D
130		582-013A	LAMP, FUSE LAMP, FUSE TYPE
131		585-105C	FUSE, 250V 500mA 5.2X20m/m
132		585-112C	FUSE, 250V, 1.6A 5.2X20m/m
133		511-326A	P.W.B. AY, LAMP INDICATOR
134		556-032A	SWITCH, LEVER, SDE-4L
135	C1	CK103P03	C, CERAMIC CK 0.01MF-P 500V